Chemistry Name: _____

Section _____ TIRRILL BURNER LAB Date: _____

Tirrill Burner Lab Lab #6

Pre-Lab Discussion:

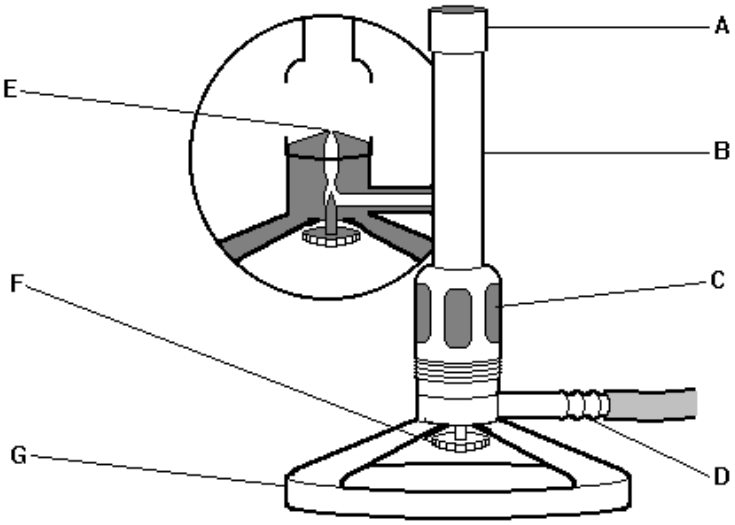

All combustion requires three components: fuel, heat, and oxidant. There are several types of laboratory burners. All types have some means to mix the fuel and oxidant. Many have a valve to regulate the amount of fuel that enters the burner. Starting the burner requires a source of heat, usually a spark from a striker or a match flame.

Tirrill burners have a barrel with air intake openings that are regulated by screwing the barrel up and down on the base. They also include a needle valve near the base of the burner to regulate the gas flow. Some Tirrill burners have a collar at the top of the barrel to help increase the fuel oxidant mixing if natural gas is used instead of propane. The gas intake tube has a small hole called a spud that increases the speed of the fuel as it exits into the barrel of the burner. Look at the burner diagram to identify these parts of your Tirrill burner.

Lean fuel mixtures (less fuel and more oxidant) burn hotter than rich fuel mixtures (more fuel and less oxidant). Rich fuel mixtures are easier to ignite. Once a Tirrill burner has been optimally adjusted for proper flame height, it is much easier to leave the fuel valve adjustment alone and adjust only the air intake openings to achieve a rich mixture for easy lighting. Use the following procedure to light your burner. Screw the barrel down to reduce the size of the air intake openings. Attach the burner to the fuel source with a rubber tube. Hold a striker just above and to the side of the barrel. *Caution: never lean over a burner during the lighting procedure. Keep all flammable chemicals away from the burner.* Turn the bench fuel valve all the way open. You should be able to note a distinctive sound when all the air has been forced out of the tubing and fuel is entering the barrel. Create a spark with the striker to ignite the flame. You may wish to practice with the striker before attempting to ignite your burner. The most common problems encountered when lighting a burner are: too high a fuel flow, failure to close the air intake openings, and improper use of the striker. If you cannot get your burner to ignite, obtain help from the instructor.

Research Question:

Where is the hottest part of a Tirrill Burner flame?

Materials:

Tirrill Burner	striker	evaporating dish	crucible tongs
wood splints	wire gauze	match	pin

Method:

Adjust the fuel valve on the burner, *not* at the bench, until the flame height is about 8 cm. Alternately adjust the fuel and air intake openings until you observe a nonluminous or pure blue flame with a light blue inner cone, the reducing cone, and a darker blue outer cone, the oxidizing cone. The height of the oxidizing cone should be about 8 cm and the reducing cone should be about 2.5 to 4 cm. Mixtures that are too fuel lean (have too much air) produce a noisy nonluminous flame with short reducing cones. This flame may jump down the barrel and begin to burn at the spud. This condition, known as strike back, heats the barrel to dangerously high temperatures. Should strike back occur, extinguish the flame immediately by closing the bench valve, wait for the barrel to cool, lower the barrel to reduce the air intake openings, then try lighting the burner again.

Once your flame has been properly adjusted, extinguish the flame by rapidly turning the bench valve to the closed position. Reset only the air intake openings by lowering the barrel and light the flame. Raise the barrel to obtain a quiet, nonluminous flame. Practice extinguishing and lighting the burner several times.

Data Collection and Processing

Light your burner and lower the barrel until the air intake openings are completely closed. The resulting flame is a *luminous* flame. Observe and record (a) the color of the luminous flame. Luminous flames are caused by the incomplete combustion of the fuel. Using crucible tongs, hold a clean, dry evaporating dish near the top of the luminous flame with the open side up until a deposit forms on the dish. Record (b) the color of the deposit and (c) speculate regarding the composition of the deposit.

(a)

(b)

(c)

Allow the evaporating dish to cool, but leave the deposit on the bottom. Optimize your air intake openings to obtain the quiet, nonluminous flame making the flame as colorless as possible. Using crucible tongs, hold the evaporating dish in the flame just above the inner reducing cone (this may take some time). Note (d) what happens to the deposit on the dish. Careful observation of the burner flame should reveal a third colorless cone just above the barrel top but well below the inner or light blue reducing cone.

(d)

Explore the nature and temperature of different parts of the burner flame by holding a wood splint in the center of the flame at each of the following positions: (e) resting on the top of the barrel, (f) below the tip or top of the inner reducing cone, (g) just above the tip of the reducing cone, and (h) just above the top of the oxidizing cone. You should only scorch the wood splint, do not allow it to burn and hide the original scorch pattern. Use a fresh portion of the wood splint or a different splint at each flame position. Record your scorch pattern for each position by making a sketch in the space provided at the right.

(e)

(f)

(g)

(h)

Check your observations by holding a wire gauze vertically in the center of the flame with one edge of the gauze resting on the barrel top. Record (i) the position of the hottest portion of the flame. Extinguish the flame but do not adjust the positions of either the fuel valve or the air intake openings. Push a straight pin through a wooden or paper match just below the head of the match. Place the pin on the top of the burner barrel so that the match head is centered in the barrel just above the barrel top and the rest of the match hangs down inside the barrel. It may be difficult, but turn the gas on full and light the burner. Record (j) what happens to the match. Speculate (k) on the composition and temperature of the lowest or colorless cone of the burner flame.

(i)

(j)

(k)

Conclusions

Once you have completed the lab, use the table below to identify the parts and function of the Tirrill burner according to the diagram on page one.

Part	Function
A	
B	
C	
D	
E	
F	
G	

1. Why is it important to clear your workspace in this lab?
2. Why is it important to have one person stay with your experiment at all times?
3. What is considered appropriate dress on lab days?
4. What special care must be used with Tirrill burners?
5. Why should you turn off burner flames when you're not using the burner?
6. How do you adjust the burner to get rid of yellow flame and produce a blue flame?
7. What gives the yellow flame its color?
8. Where is the flame burning in a strike back?
9. What steps should you take if strike back occurs?
10. What causes strike back?
11. Heating test tubes, evaporating dishes, beakers, or *anything* in a yellow flame quickly covers objects with a black coating. What is the coating and why is it happening?

Applications

1. What did YOU (personally) learn?
2. How can any idea, principle, or activity in this lab be used in the real world?